# Project #5: Sigma-Delta Modulator Using Gm-C Bandpass Filter

## EEE 598: Switched-Capacitor Filter & Analog Signal Processing Circuits

**Ian Karnick**
**Ravishankar Bhat**
**Pankaj Wavre**
**Shankar Sankappa Baddur**

## Introduction

The purpose of this project is to design and simulate the behavior of a Bandpass Sigma-Delta Modulator which is applied to a VLSI-integrated VLSI sensor/ADC circuit chip on a wearable medical device. A Sigma-Delta modulator is an analog-to-digital (ADC) converter that encodes analog signals into a 1-bit bitstream and shapes quantization noise away from a targeted frequency band. The design incorporates a sacrifice of time due to oversampling for high SNR for increased precision of the output digital signal. A bandpass filter is required for the Sigma-Delta modulator as it uses a target frequency band (i.e. 100 kHz) as its baseband, filtering noise away from the baseband and providing high SNR at a particular frequency. This makes the Sigma-Delta modulator uniquely suited for integration into a wearable medical device because it can receive analog signals from any kind of biosensor via a Low Noise Amplifier and transform those signals into low-noise, high-precision digital bitstreams with help from a Digital Decimation Filter. It consumes very little power, fits a small chip area ($< 1mm^2$), and has a high tolerance for analog imperfections due to its simple front end.

The scope of this project includes the design and simulation of the Sigma-Delta modulator which uses two components: a first-order gm-c bandpass filter circuit and a digital quantizer. This report will show how these components were designed and tested, as well as how their behavior contributes to the overall behavior of the Sigma-Delta modulator. The report will also provide estimations of the total chip-area of the modulator as well as total power consumption to show the practicality of the design for this circuit.

## Gm-c Lowpass Prototype Filter

The bandpass filter needed for the Sigma-Delta modulator was designed using Gm-c circuits. The first step required in order to construct the bandpass filter was to first construct a lowpass (LP) prototype using a Gm-c circuit. This Gm-c circuit, shown in Figure 1a and 1b, is the Fully Differential Transconductance Amplifier used in the LP and BP prototype Gm-c circuits.

**Figure 1a: Transistor-level schematic of Fully Differential Amp**

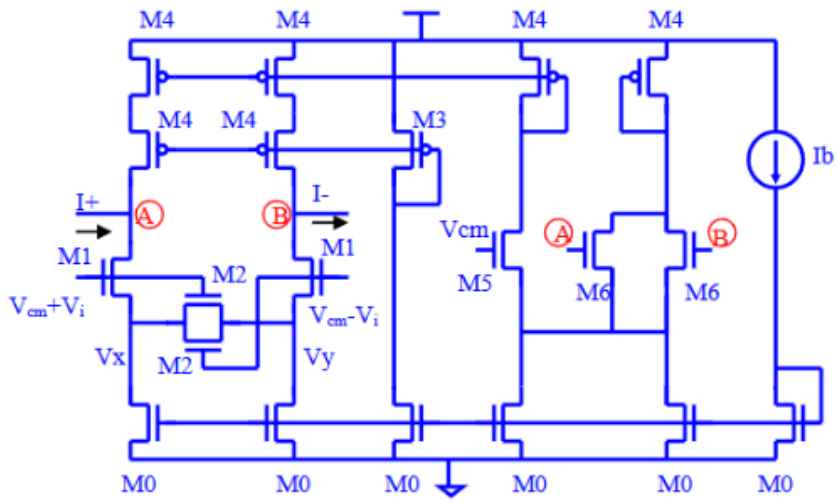


**Table 1: Fully Differential Amp Design Values**

| Component | Value | Multiplicity |
|---|---|---|
| M0 (W/L in µm) | 15/1.5 | 1 |
| M1 (W/L in µm) | 15/3 | 1 |
| M2 (W/L in µm) | 3.75/3 | 1 |
| M3 (W/L in µm) | 7.5/1.5 | 1 |
| M4 (W/L in µm) | 30/1.5 | 1 |
| M5 (W/L in µm) | 30/1.5 | 1 |
| M6 (W/L in µm) | 15/1.5 | 1 |
| $I_b$ | 50 uA | - |
| $V_{DD}$ | 3V | - |
| $V_{ss}$ | 0V | - |
| $V_{cm}$ | 1.5 V | - |

**Figure 1b: Fully Differential Amp Design in Cadence Virtuoso**

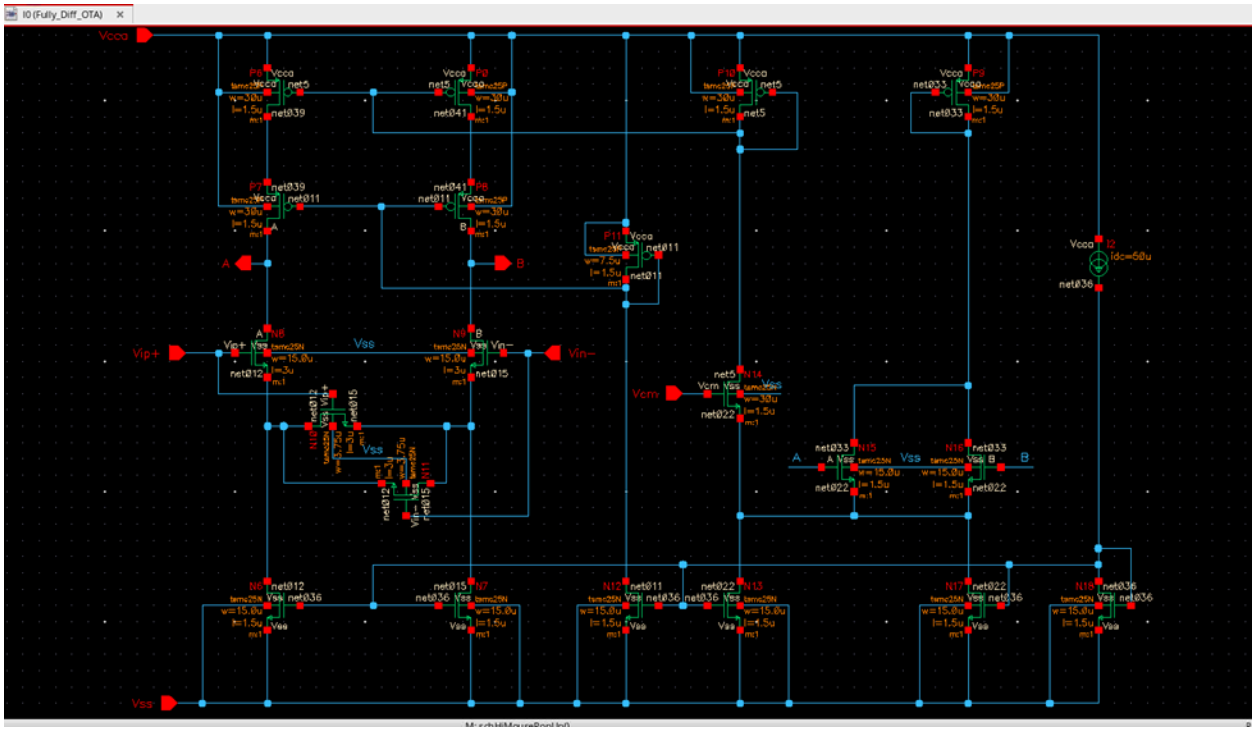


Figure 2 shows its usage in the LP prototype circuit. A single Gm-c integrator yields the following transfer function:

$$H(s) = Gm / sC = \omega_0 / s$$

This exemplifies the low-pass behavior of a Gm-c integrator. A 120pF capacitor was selected for this pair, using the relationship between Gm and $\omega_0$,

$$\omega_0 = Gm / C$$

giving the following calculation of Gm for the OTA.

$$Gm = \omega_0 * C = (2pi*100k)*(120\ pF) = 75.4\ \mu S$$

**Figure 2: Schematic of LP Prototype Filter**

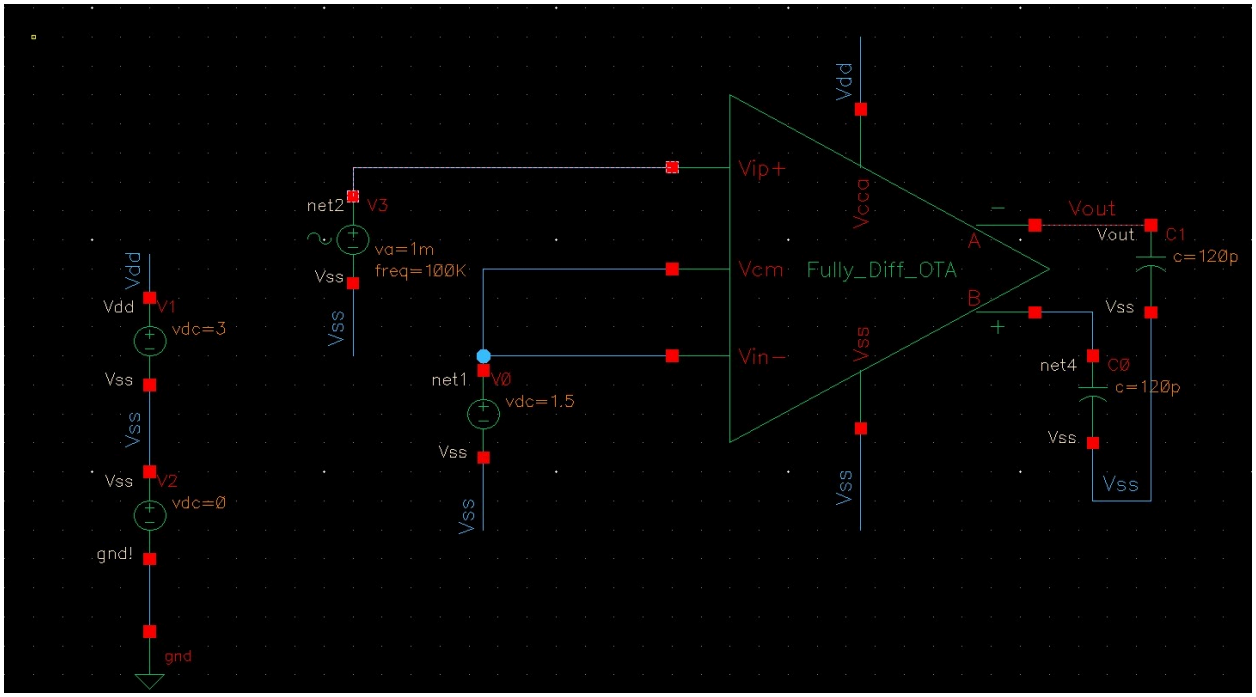


Figure 3 shows the AC response of the lowpass filter. The gain starts out flat at about 35 dB before sloping downward at about -20dB/decade as exemplified by the transfer function. The phase starts at +180°, drops to +90° at the cutoff frequency, and then drops again to 0° at high frequencies. This is the behavior of a lowpass filter: It passes frequencies lower than the cutoff frequency at higher bandwidth than frequencies higher than the cutoff frequency.

**Figure 3: Schematic of AC response of Fully Diff Amp**

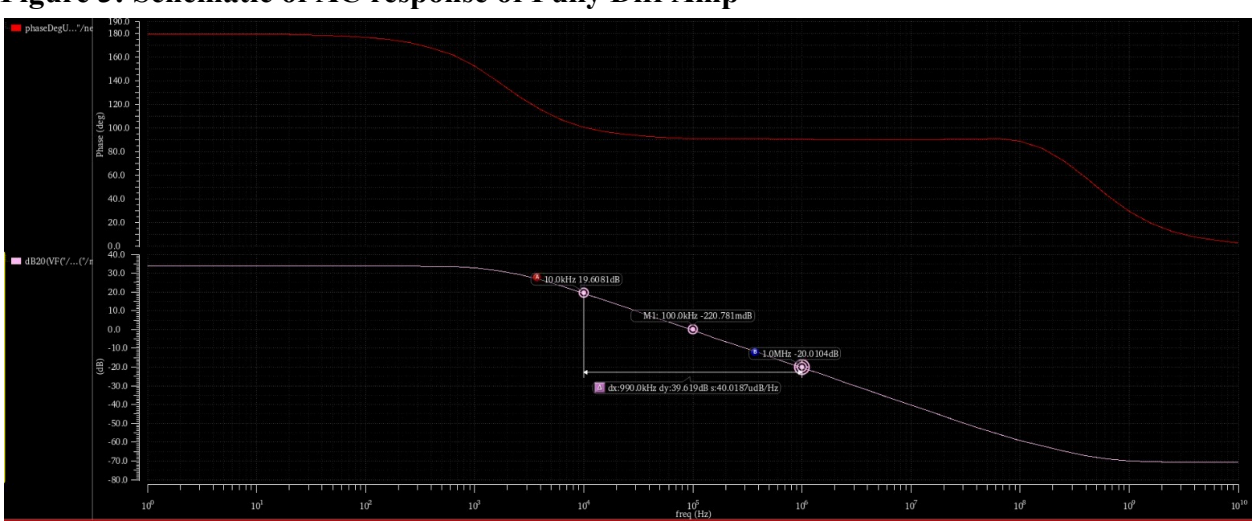

**Gm-c Bandpass Prototype Filter**

To design a Gm-c bandpass filter, a bandpass transformation was performed on the lowpass filter. This is done by substituting the following expression S into the lowpass transfer function.

$S = Q(s / \omega_0 + \omega_0 / s)$ Where $Q = 1$

Substituting $S = (s / \omega_0 + \omega_0 / s)$ into $H(s) = Gm / SC$ yields the following transfer function for the BP prototype filter.

$H(s) = ((Gm^* \omega_0) / C) * (s / (s^2 + \omega_0^2))$

This transformation moves the center of the gain band from $\omega_0 = 0$ to $\omega_0 = 100$ kHz, which is the center frequency needed for the bandpass filter. To accomplish this, two fully differential transconductance amplifiers are used in Figure 4 where one functions as a feedforward Gm-c integrator and the other functions as a feedback Gm-c amplifier. These two amplifiers push the frequency band on both sides towards the center frequency as shown in Figure 5. This creates an asymptotic peak at the center frequency that is theoretically infinite but realistically capped in the simulation.

**Figure 4: Schematic of BP Prototype filter**

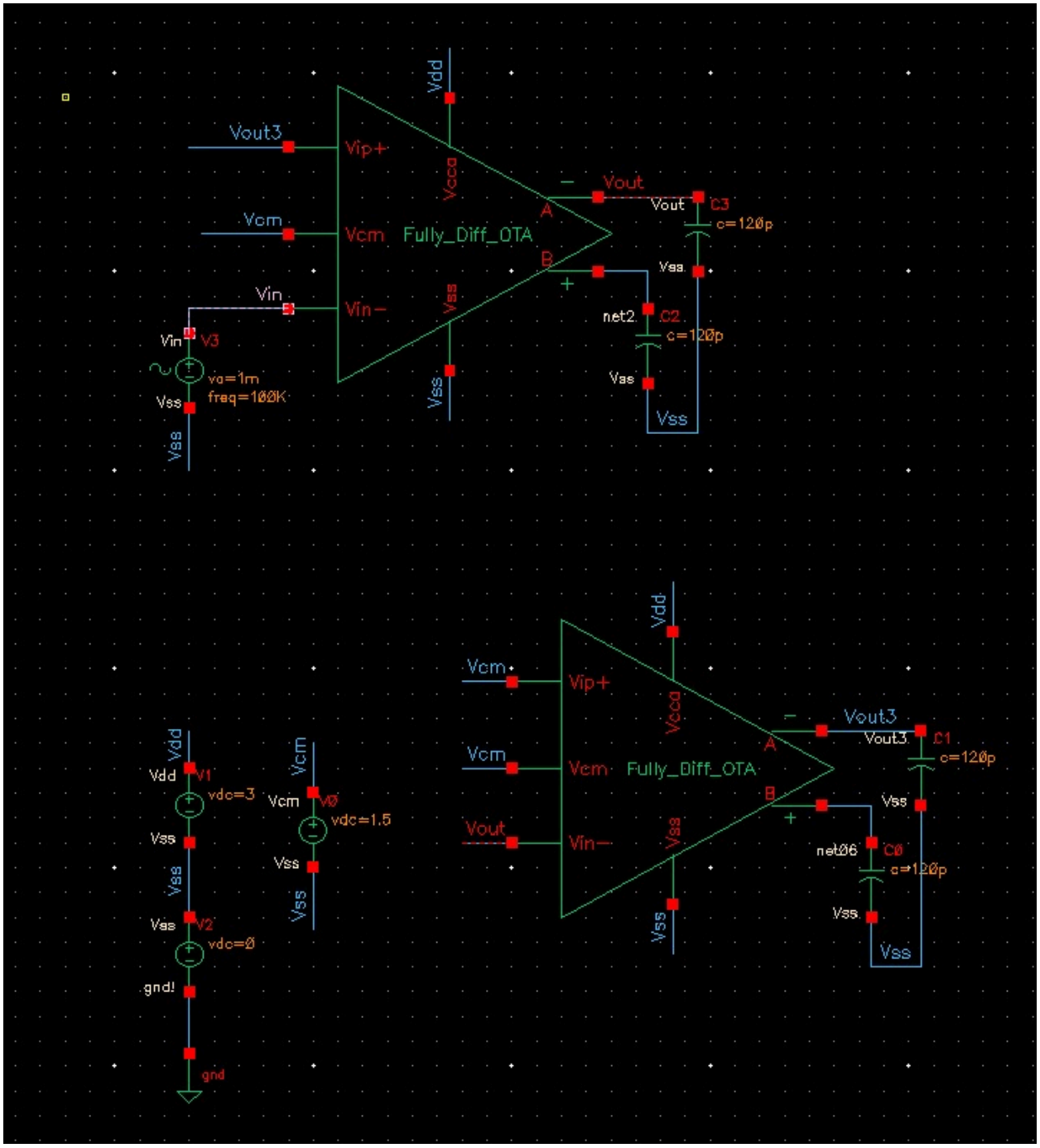

**Figure 5: AC response of BP filter**

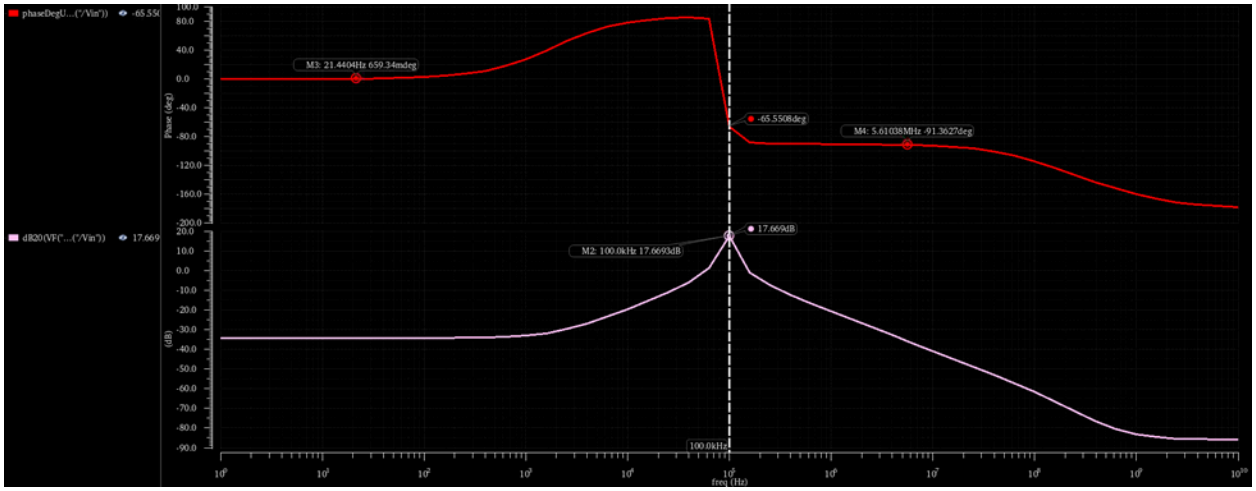


## Signal and Noise Transfer Functions of the Bandpass Filter

Figure 6 shows the testbench circuit used to obtain the signal transfer function (STF) and noise transfer function (NTF) of the feedback loop for the Sigma-Delta modulator. The STF describes how the input signal is transmitted to the modulator, and the NTF describes the effect of the loop on quantization noise. Figure 7 shows the AC response for the signal transfer function. It has a peak of near 0 dB at the center frequency. This gain response shows the function of the feedback loop in passing frequencies closest to the center frequency at near-unity gain. The NTF in Figure 8 has a very pronounced downward spike at the center frequency, revealing the shape that the loop imposes on the quantization noise. The gain response of the noise transfer function produces very low noise at the center frequency so that analog signals passed through this frequency have very high SNR's and virtually no distortion. This is very important to the functionality of the Sigma-Delta Modulator as it is required to transmit extremely clear analog signals at the center frequency to the quantizer.

**Figure 6: Schematic of STF/NTF testbench for BP prototype filter**

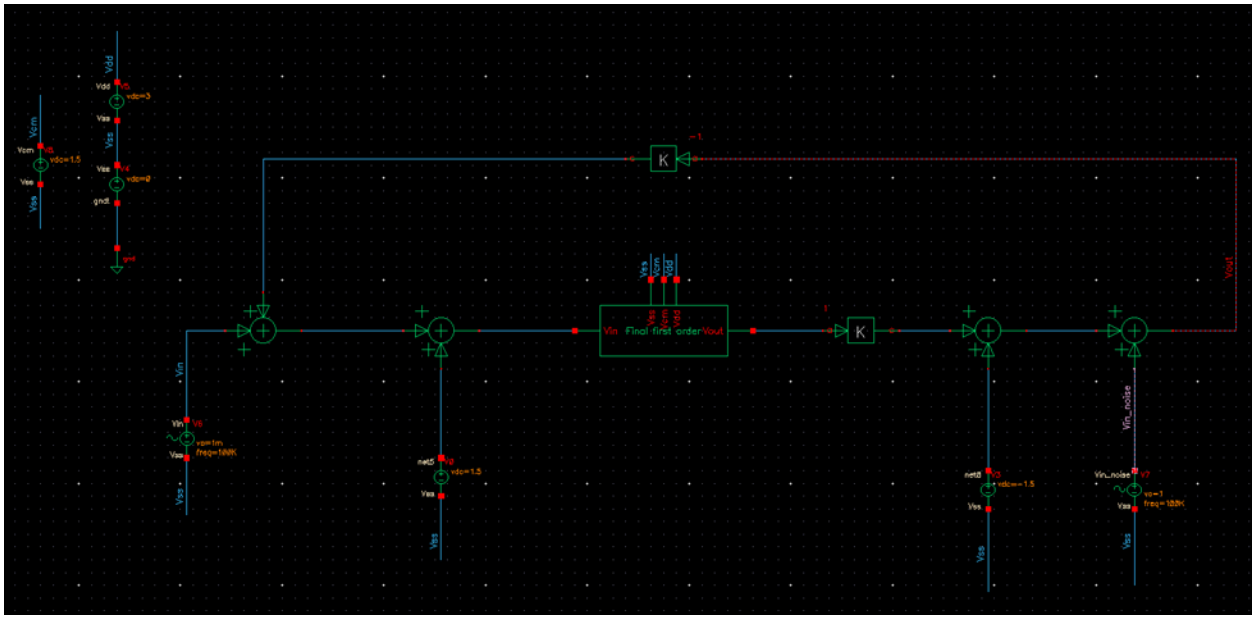


**Figure 7: STF AC response**

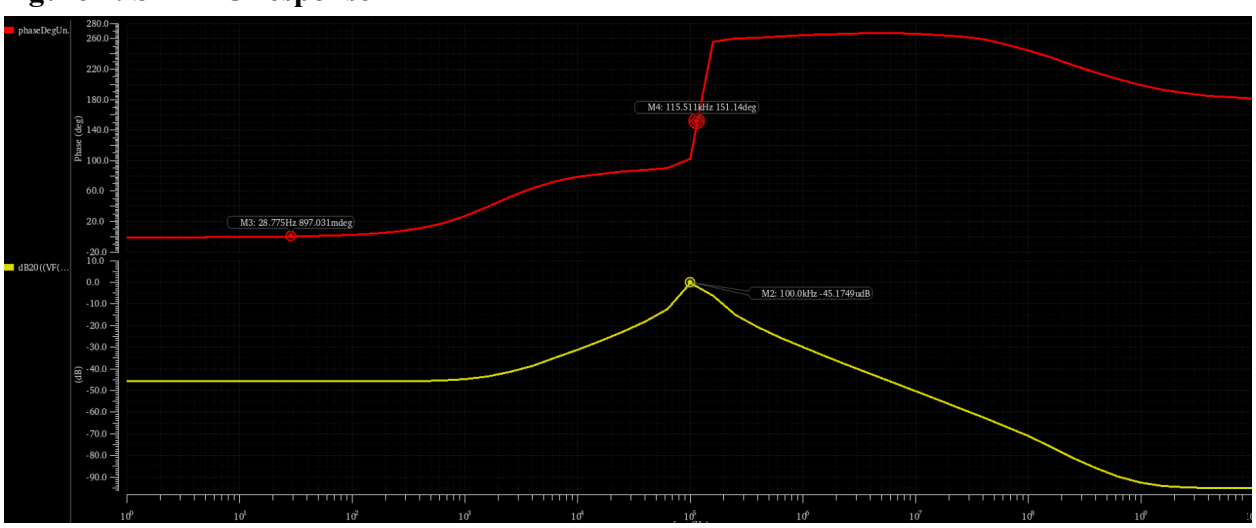

**Figure 8: NTF AC response**

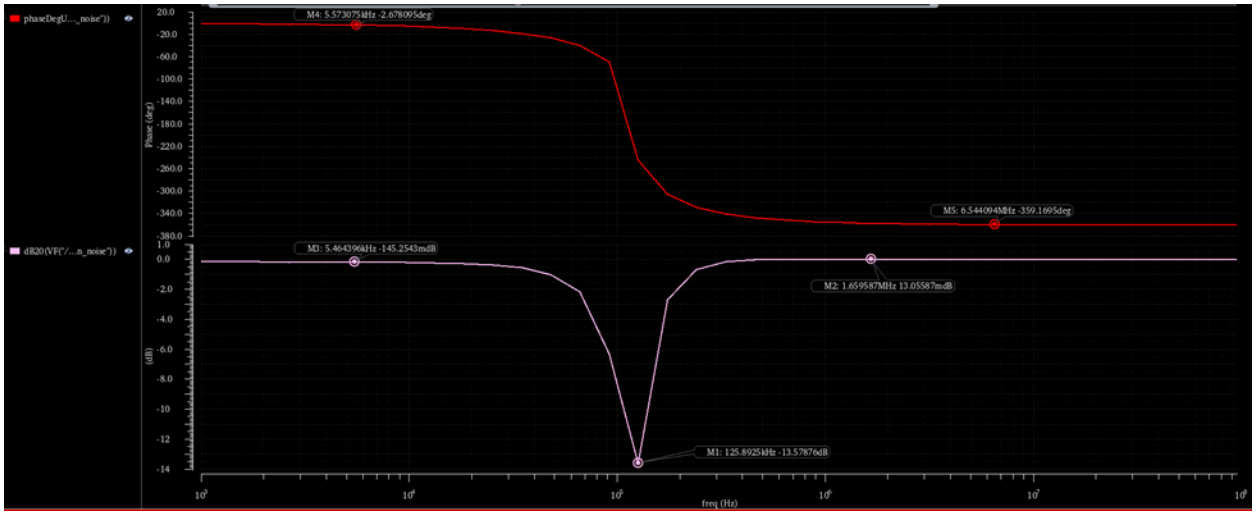


## The Quantizer

The quantizer is the element in the Sigma-Delta modulator that converts the analog signal into a digital signal (1's and 0's). It performs this function by comparing the voltage level of the analog signal on a particular clock cycle to a threshold voltage. It outputs "high" if it detects that the voltage of the analog signal is above this threshold voltage and "low" if it detects the voltage to be below the threshold. The quantizer in this Sigma-Delta modulator was designed using a two-stage opamp, as shown in Figure 9 and a DQ flip flop shown in Figure 10.

**Figure 9: Transistor-level schematic of 2-stage amp**

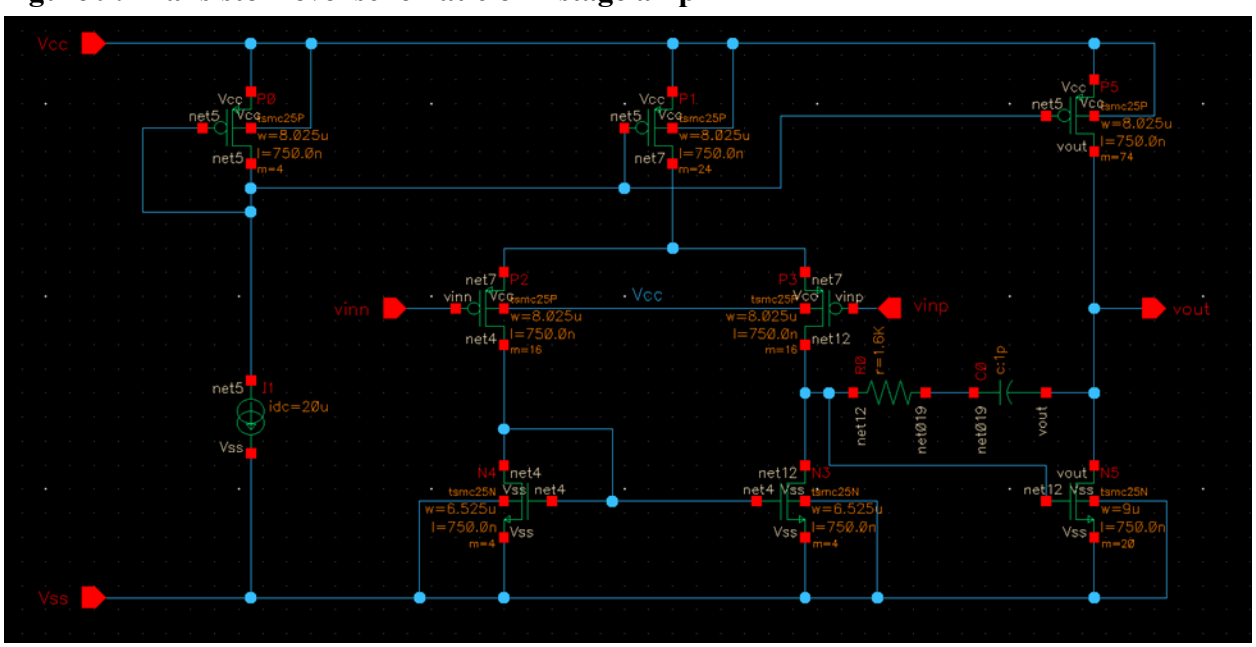

Transistor Key:
M0 = Top left PMOS
M1 = Top middle PMOS
M2 = Top right PMOS (1st stage bias current branch)
M3 = PMOS pair connected to Vin+ and Vin-
M4 = Diode-connected NMOS Pair
M5 = Bottom right NMOS (2nd stage bias current branch)

**Table 2: 2-Stage Opamp Design Values**

| **Component** | **Value** | **Multiplicity** |
|---|---|---|
| M0 (W/L in μm) | 8.025/0.75 | 4 |
| M1 (W/L in μm) | 8.025/0.75 | 24 |
| M2 (W/L in μm) | 8.025/0.75 | 74 |
| M3 (W/L in μm) | 8.025/0.75 | 16 |
| M4 (W/L in μm) | 6.525/0.75 | 4 |
| M5 (W/L in μm) | 9/1.5 | 20 |
| $I_b$ | 20 uA | - |
| R | 1.6 kOhms | - |
| C | 1 pF | - |
| $V_{DD}$ | 3V | - |
| $V_{ss}$ | 0V | - |

**Figure 10: Transistor-level schematic of DQ Flip Flop**

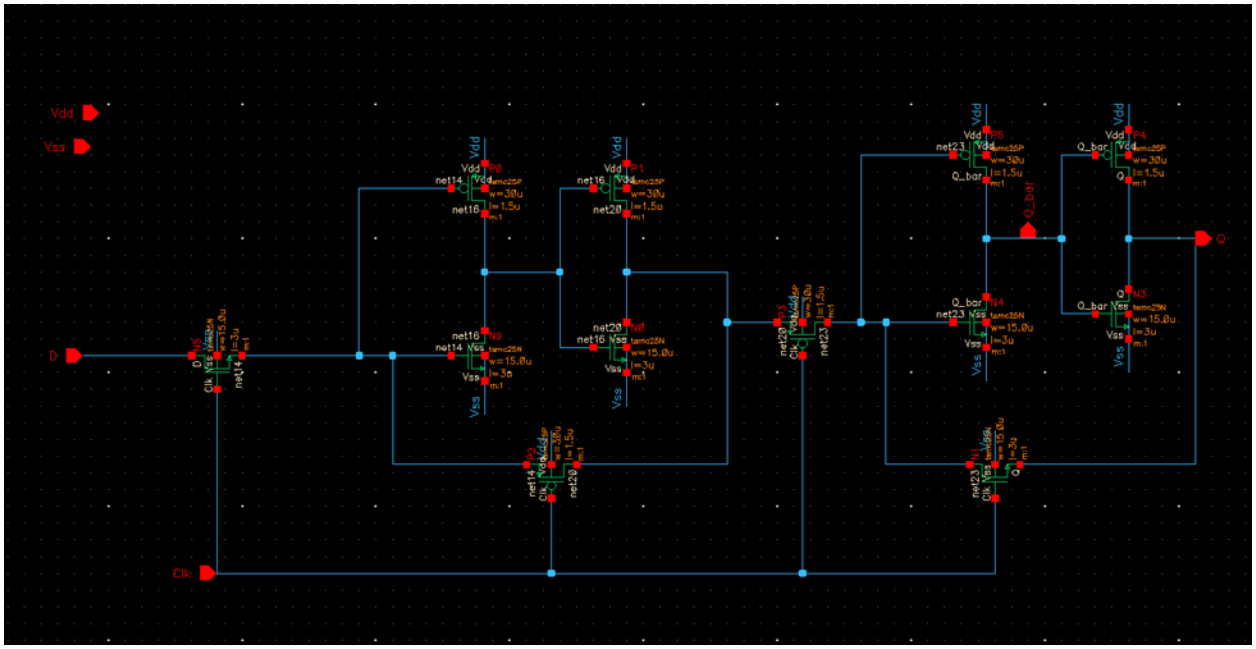


Transistor Key:
M0 = Top row of 4 Inverter PMOS
M1 = Middle row of 4 Inverter NMOS
M2 = clk-connected PMOS
M3 = clk-connected NMOS

**Table 3: Custom DQ Flip Flop Design Values**

| Component | Value | Multiplicity |
|---|---|---|
| M0 (W/L in µm) | 30/1.5 | 1 |
| M1 (W/L in µm) | 15/3 | 1 |
| M2 (W/L in µm) | 30/1.5 | 1 |
| M3 (W/L in µm) | 15/3 | 1 |
| $V_{DD}$ | 3V | - |
| $V_{ss}$ | 0V | - |

The two-stage opamp in this circuit functions as the comparator that reads the analog signal from the bandpass filter and amplifies it, producing a high-definition voltage signal with rail-to-rail transitions that can be quantized by the DQ flip flop. It was chosen to serve as the comparator for this modulator because it produces a high gain which is needed to output the amplified signal at a speed that can be sampled on an 8 Mhz clock. It also has high input sensitivity which is needed to output the amplified analog signal at a bandwidth large enough to meet the sampling rate required for the quantizer.

The DQ flip flop provides the clean digital signal output of the Sigma-Delta modulator by sampling the output of the comparator and outputting a bit on each clock cycle. When it samples the signal, it makes a decision as to whether to output a 0 or 1 depending on whether the analog signal is above or below the threshold voltage (which in this case is 3V / 2 = 1.5V). It outputs a 1 if the analog signal is above 1.5V and a 0 if it is below 1.5V. The parts of the signal that are unsampled contribute to the quantization noise that is shaped by the loop. In the testbench used to obtain the NTF, an AC voltage source was used to represent and simulate the quantization noise present in the DQ flip flop.

**Figure 11: Transistor-level schematic of Inv**

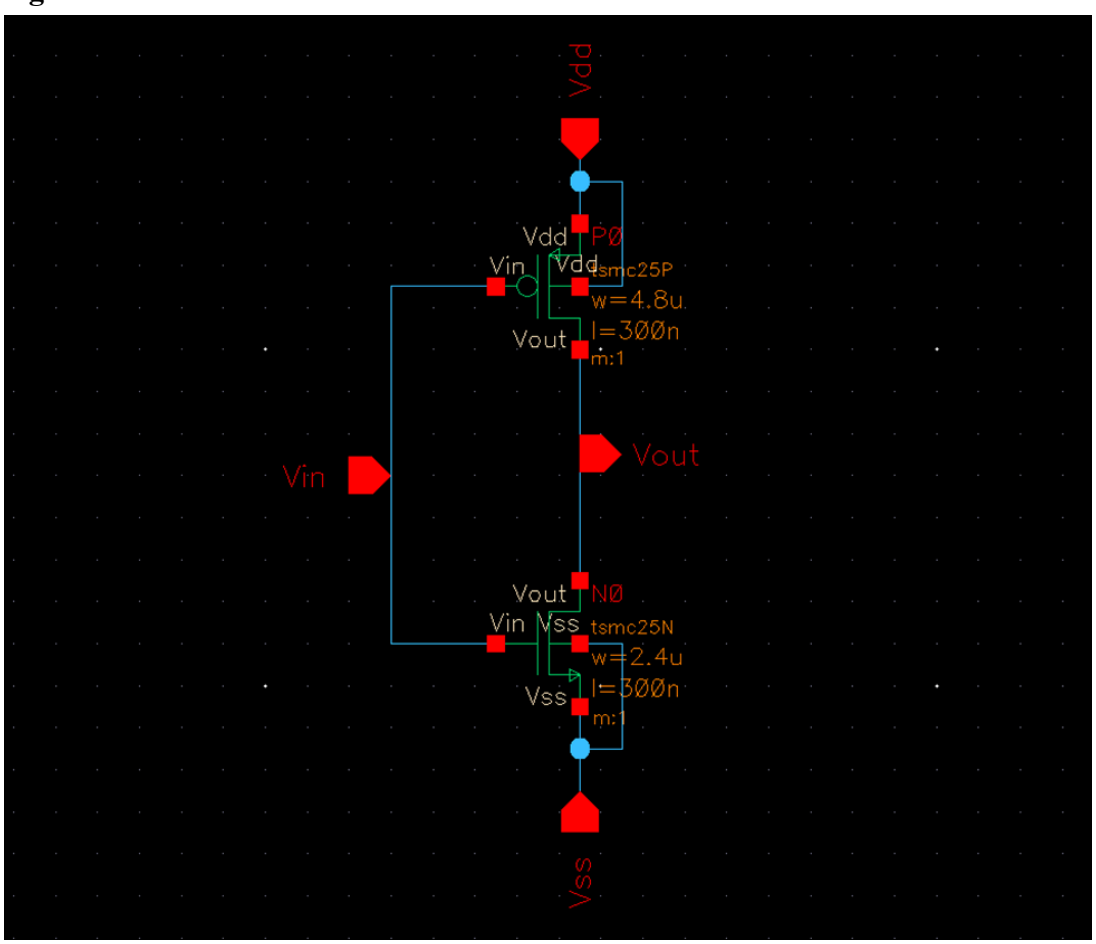

**Simulation of the Sigma-Delta Modulator**

The schematic of the full Sigma-Delta modulator design is shown in Figure 12. The 1st order bandpass filter, as well as the 2-stage opamp and DQ flip flop that comprise the quantizer, are present with the feedback loop. While this is the complete design of the Sigma-Delta modulator, it is not ideal for simulation in Cadence Virtuoso because the software tends to be very slow and unstable for this type of simulation. To address this, Figure 13 takes the comparator of the Sigma-Delta modulator and replaces it with an inverter (whose sizing is shown in Figure 11). The inverter works well as a behavioral comparator in the analog domain, making it an ideal component for testing the Sigma-Delta modulator. The output transient simulation of the Sigma-Delta modulator is shown in Figure 14.

**Figure 12: Schematic of Final Sigma-Delta Modulator w/ 2-stage opamp and DQ FF**

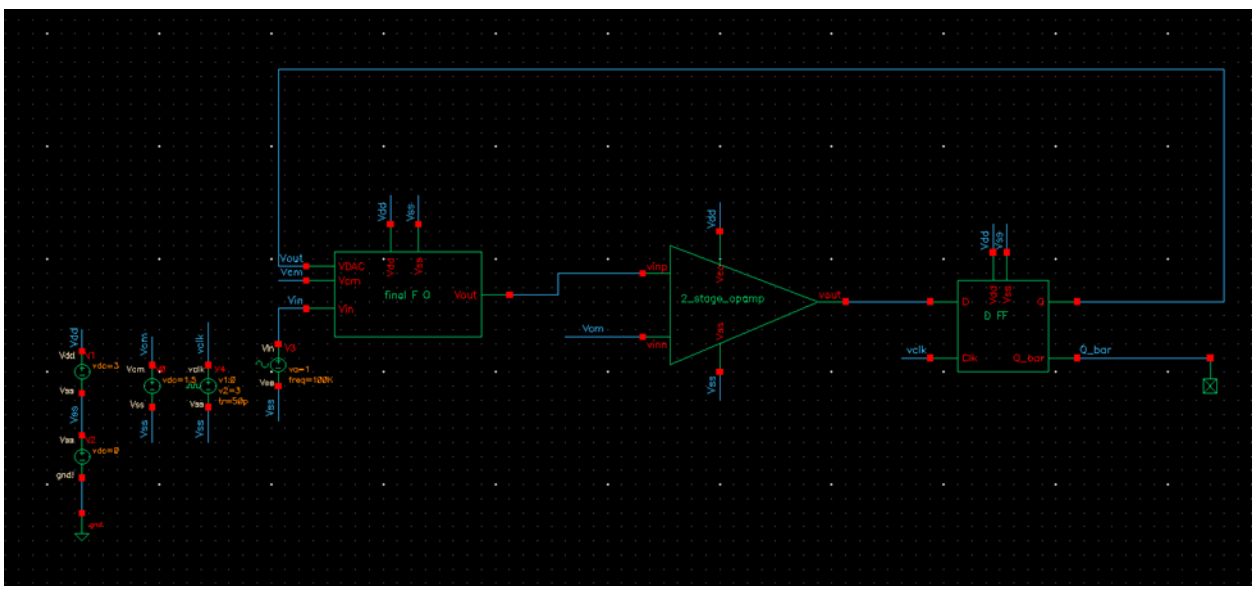

**Figure 13: Schematic of Sigma-Delta Modulator with Inv**

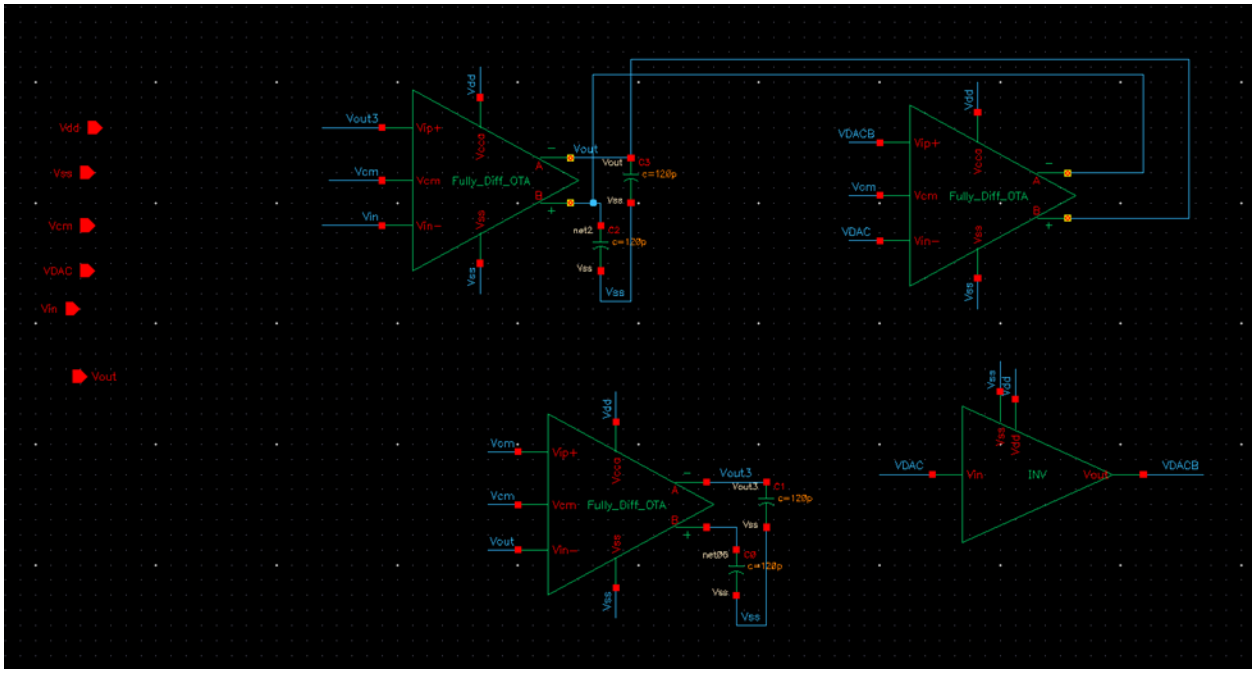


**Figure 14: Final Output Waveform**

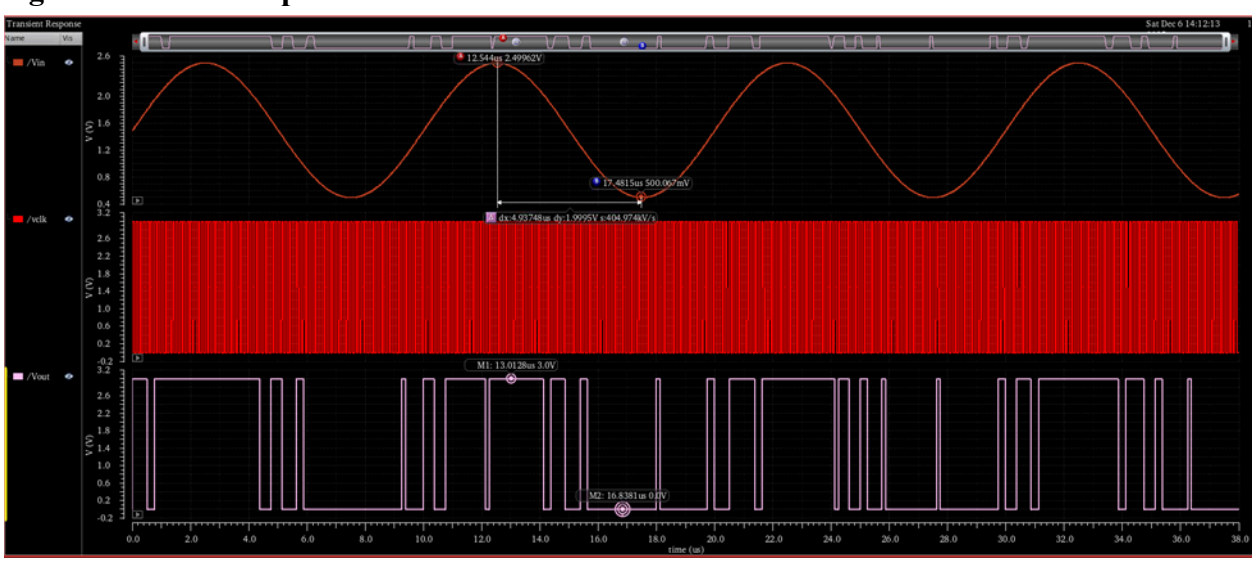


The simulation of the Sigma-Delta modulator displays the analog sinusoidal signal, the 8-MHz clock signal, and the quantized output of the sinusoidal signal. Ideally, one would expect to see the output "high" after the input sinusoid crosses the 1.5V threshold approaching $V_{DD}$ and then "low" after it crosses the threshold voltage again going the other way. However, there are some visible errors of high and low in the output, showing the effect that quantization noise has

on the Sigma-Delta modulator. The number of errors is also higher when the inverter is used as the quantizer for the modulator, as the combination of the 2-stage opamp and DQ flip flop provides for far more precise readings and less errors. Despite the number of errors present in this simulation, the response of the quantized output clearly exhibits the proper functionality of the Sigma-Delta modulator design.

**Layout Area and Power Dissipation of the Sigma-Delta Modulator Design**

This section of the report estimates the total chip area and the total power dissipation of the design. The following assumptions are made in the calculated estimate for chip area:

1. MIM capacitor density = 1fF/$\mu m^2$
2. Transistor area: $A_w$ = 2 $\mu m^2/\mu m$ of total transistor width W
3. Resistor area estimate: $R_{sheet}$ = 30 Ohm/sq and poly width w = 2 µm
4. Analog guard overhead = 10% added to BP filter area + 2-stage opamp area
5. Routing overhead = 35% added to total raw area
6. Current/bandgap reference excluded from estimation (already available on-chip)

First, the total transistor widths are calculated for the fully differential amplifier, 2-stage opamp, and DQ flip flop. A multiplicity of greater than 1 introduces that many copies of the transistor to the total width.

Fully Differential Amplifier:

$W_{OTA} = 6*W_{M0} + 2*W_{M1} + 2*W_{M2} + W_{M3} + 6*W_{M4} + W_{M5} + 2*W_{M6}$

$W_{OTA} = 6*(15\mu m) + 2*(15\mu m) + 2*(3.75\mu m) + 7.5\mu m + 6*(30\mu m) + 30\mu m + 2*(15\mu m)$

$W_{OTA} = 375\mu m$

2-Stage Opamp:

$W_{OP} = W_{M0}*4 + W_{M1}*24 + W_{M2}*74 + 2*W_{M3}*16 + 2*W_{M4}*4 + W_{M5}*20$

$W_{OP} = (8.025\mu m)*4 + (8.025\mu m)*24 + (8.025\mu m)*74 + 2*(8.025\mu m)*16 + 2*(6.525\mu m)*4 + (9\mu m)*20$

$W_{OP} = 1319.55\ \mu m$

DQ Flip Flop:

$W_{DQ} = 4*W_{M0} + 4*W_{M1} + 2*W_{M2} + 2*W_{M3}$

$W_{DQ} = 4*(9.6\mu m) + 4*(4.8\mu m) + 2*(28.8\mu m) + 2*(14.4\mu m) = 144\ \mu m$

The total area of a transistor-level circuit is given by the formula

$Area_T = A_W * W$

The area of a capacitor is given by

$Area_C = C / 1fF/\mu m^2$

The area of a resistor is given by

$Area_R = 2*R*w / R_{sheet}$

The total areas of each Sigma-Delta modulator component are then calculated and summed together to obtain the total raw area of the design:

BP Filter:

Capacitor Area = $4*(120\ pF) / 1fF/\mu m^2 = 420{,}000\mu m^2$

BP Filter Area = $(2\ \mu m^2/\mu m) * W_{OTA} + 420{,}000\mu m^2 = 421{,}500\mu m^2$

2-Stage Opamp:

Capacitor Area = $1\ pF / 1fF/\mu m^2 = 1{,}000\mu m^2$

Resistor Area = $2*(1.6\ kOhm)*(2\ \mu m) / (30\ Ohm/sq) = 213.3\mu m^2$

2-Stage Opamp Area = $A_w * W_{OP} + 1{,}000\mu m^2 + 213.3\mu m^2$

2-Stage Opamp Area = $(2\ \mu m^2/\mu m) * 1{,}319.55\ \mu m + 1{,}000\mu m^2 + 213.3\mu m^2 = \sim 3{,}853\mu m^2$

DQ Flip Flop Area = $A_w * W_{DQ}$ = (2 $\mu m^2/\mu m$) * (144$\mu m$) = 288$\mu m^2$

Pre-Overhead Analog Area = BP Filter Area + 2-Stage Opamp Area

= 421,500$\mu m^2$ + 3,853$\mu m^2$ = 425,083$\mu m^2$

Analog Guard Overhead = 10% * 425,083$\mu m^2$ = ~42,509$\mu m^2$

Total Analog Area = 425,083$\mu m^2$ + 42,509$\mu m^2$ = 467,592$\mu m^2$

Total Raw Area = Total Analog Area + DQ Flip Flop Area = 467,592$\mu m^2$ + 288$\mu m^2$

Total Raw Area = 467,880$\mu m^2$

A routing overhead of 35% is added to the total raw area, giving the total estimated area for the design.

Routing Overhead = 35% * 467,880$\mu m^2$ = 163,758$\mu m^2$

Total Estimated Area = 467,880$\mu m^2$ + 163,758$\mu m^2$ = 631,638$\mu m^2$ = **~0.632mm²**

Next, the total power dissipation of the circuit is calculated. Total power dissipation consists of the summation of four different kinds of power in the circuit: capacitive switching power, bias-current power, digital switching power, and short circuit power. This is represented by the following formula

$$P_{TOT} = P_C + P_{bias} + P_D + P_{SC}$$

and the respective power types are given by the following formulas:

$$P_C = \alpha C(\Delta V)^2 f$$

$$P_{bias} = V_{DD} * I_{bias}$$

$$P_D = \alpha_{DQ} C_{DQ} (V_{DD})^2 f$$

$$P_{SC} = k_{sc} * P_D$$

The following assumptions are made for this calculation.

1. Power dissipation due to leakage current is negligibly small
2. Short circuit factor $k_{sc} = 0.1$ (conservative estimate)
3. Load capacitance for a typical DQ Flip Flop $C_{DQ} = 10fF$
4. Activity factor for DQ Flip Flop $\alpha_{DQ} = 0.5$ for typical quantizers
5. Activity factor for capacitive switching power $\alpha = 1$
6. Analog swing on a capacitor $\Delta V = 0.3V$

The total bias current is found by adding up all bias currents in the Sigma-Delta modulator circuit. There is one 50μA bias current in each of the two fully differential amplifiers located in the BP filter, and there are 20μA and 320μA bias currents in the first and second stage of the opamp respectively. It is shown here.

$$I_{bias} = 2(50\mu A) + 20\mu A + 320\mu A = 440\mu A$$

Thus, the calculations for total power dissipation are as follows

$$P_C = (481\ pF) * (0.3V)^2 * (8\ MHz) = 0.346\ mW$$

$$P_{bias} = (440\mu A) * (3V) = 1.32\ mW$$

$$P_D = (0.5) * (10fF) * (3V)^2 * (8\ MHz) = 0.00036\ mW$$

$$P_{SC} = (0.1) * (0.00036\ mW) = 0.000036\ mW$$
$$P_{TOT} = 0.346\ mW + 1.32\ mW + 0.00036\ mW + 0.000036\ mW = \mathbf{\sim 1.67\ mW}$$

The estimated area and total power dissipation found in this section are both reasonable for a circuit design of this caliber and can be realistically implemented in most medical technology equipment, fully validating the practicality of our design.

**Conclusion**

In conclusion, a Sigma-Delta modulator was designed and tested for this project, and it was found that the design ensures proper signal modulation, fits into an area small enough for most medical device circuits, and dissipates a very small amount of power. Proper validation of the Sigma-Delta modulator was carried out in the form of AC and transient simulation on Cadence Spectre and all results have been shown. This project provided valuable insight and experience on the design and implementation of various filters and amplifiers into a complex device like this with applications that can have a real-world impact.